19 329 Volume control trim

Exploded View

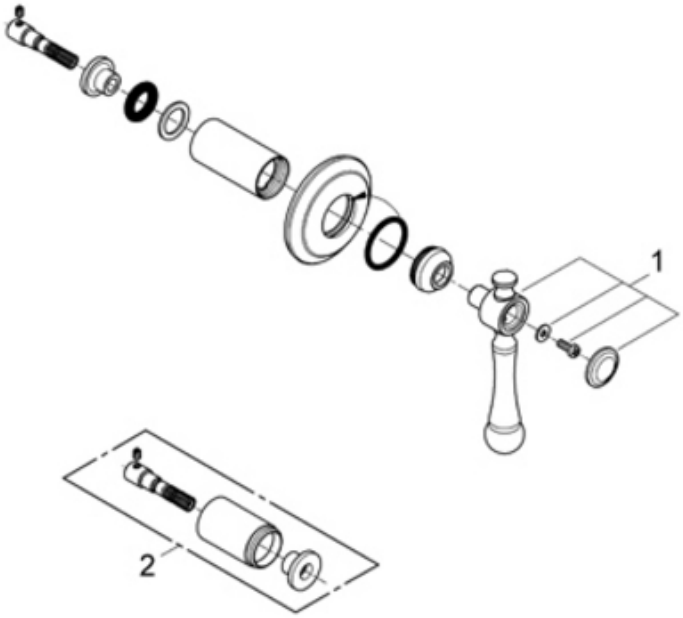

GROHE America, Inc 241 Covington Drive, Bloomingdale, IL 60108 630-582-7711 Fax:630-582-7722
GROHE Canada, Inc 1226 Lakeshore Road East, Mississauga, Ontario Canada L5E 1E9 905.271.2929 Fax:905.271.9494