Bridgeford

20 128 High Profile with Dual Handle

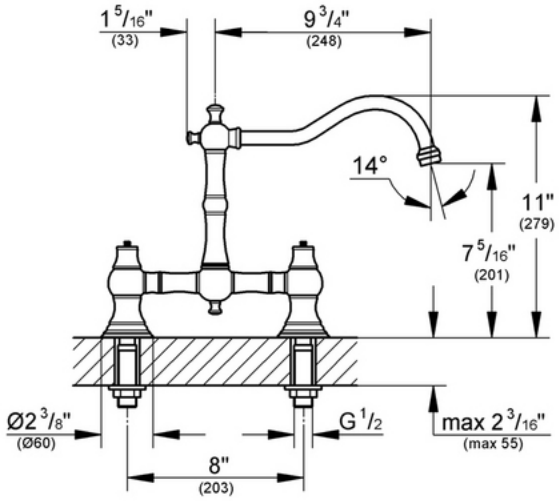

Description

GROHE SilkMove® ceramic cartridges
Tubular swing spout
9 3/4" spout reach
Sold less handles. Shown with 18 244 Bridgeford lever handles and 18 733 cross handles.

Flow Rate

2.2 gpm at 45 psi, 2.5 gpm at 80 psi
(9.5 lpm)

Code Compliance

ASME/ANSI A112.18.1M

Finish Options

20 128 OOO Starlight® Chrome
20 128 ENO Infinity Brushed Nickel
20 128 ZBO Oil Rubbed Bronze

GROHE America, Inc 241 Covington Drive, Bloomingdale, IL 60108 630-582-7711 Fax:630-582-7722
GROHE Canada, Inc 1230 Lakeshore Road East, Mississauga, Ontario Canada L5E 1E9 905.271.2929 Fax:905.271.9494